Royal Netherlands Meteorological Institute
Ministry of Infrastructure and Water Management

A Pseudo Global Warming approach in HCLIM and Tactus

Hilke Lentink, Bert van Ulft, Chris Romick, Natalie Theeuwes, Geert Lenderink, Hylke de Vries

Concept of Pseudo Global Warming (PGW)

Pseudo global warming is a technique where past weather events are re-simulated under future climate conditions to asses how global climate change might alter them.

Advantages
- Story-telling approach
- What-if scenarios are good for impact and risk assessment
- Low computational resources in comparison to downscaling CMIP data
- Clear attribution of climate change effect
- High resolution regional analysis

Disadvantages
- The large-scale weather pattern does not fundamentally change
- It is unclear if the original weather pattern would occur in a warmer climate

At KNMI a PGW version of current weather is computed at a daily basis using the relatively coarse RACMO model (Fig. 1)

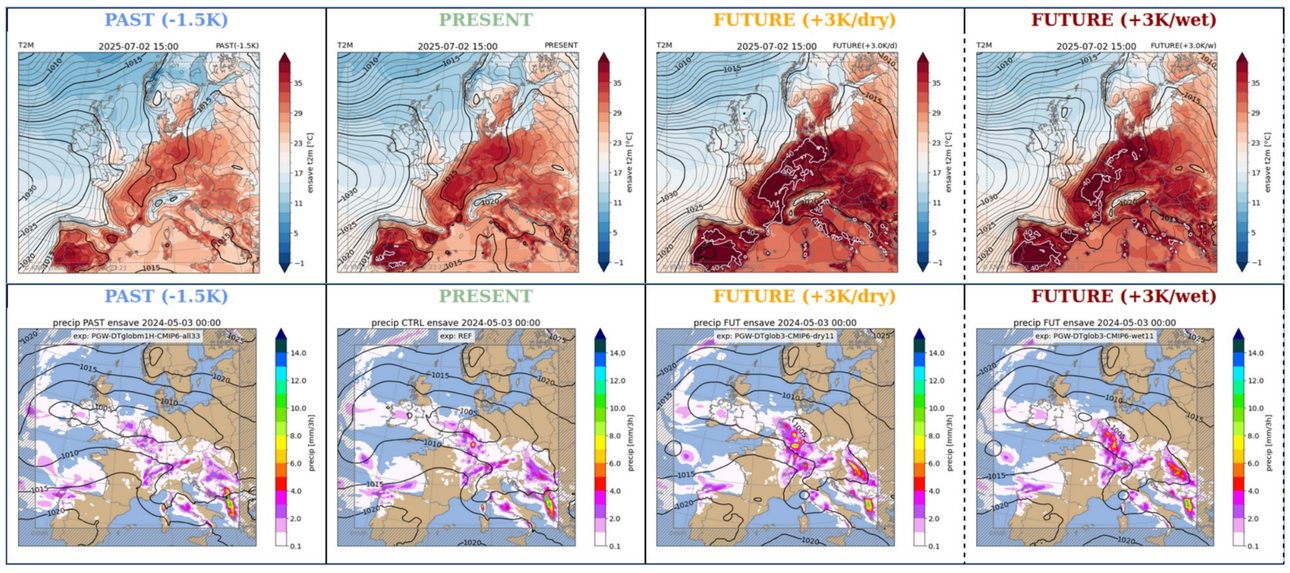

Figure 1. Pseudo global warming as computed at the KNMI using the RACMO model for a heatwave in July 2025 (upper) and a storm with heavy precipitation in May 2024 (lower), for past (-1.5 K), present, and future scenarios (+3K) where the 11 driest and 11 wettest models are used from an ensemble of 33 CMIP6 models.

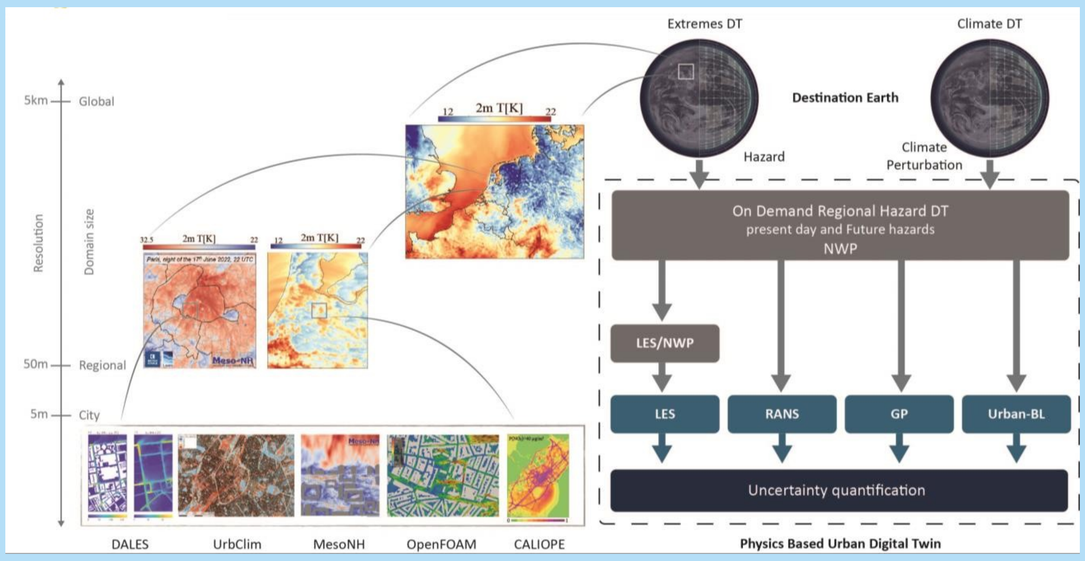

Figure 2. Connections beween multiscale components of the Physics Based Urban Digital Twin of Urban AIR. (Source: Fig. 5 from the UrbanAIR Proposal)

Project UrbanAIR

Aim
- Improve urban air quality modeling (Fig. 2)
- Understand climate-air pollution interactions
- Support urban planning and decision-making (mitigation, adaptation, sustainability)

Methods and tools (relevant)
- Destination Earth On Demand Extremes (DEODE)
- Pseudo global warming approach as tool to understand how future climate conditions will alter urban air quality and pollution dynamics
- LES modeling up to building-scale resolution, using RCM simulations with PGW.

Current approach

PGW is currently implemented in GL for both HCLIM and Tactus, and will therefore be available to the community soon.

Method of adding the climate signal:
- A Δ-field is added to the model grid in GL (Fig. 3)
- Adapted 3D variables: T, RH, u, v
- Adapted 2D variables: P-surface, SST (Tsfc) and eventually Tsoil and Sea ice
- The Δ-field is linearly interpolated in time and bilinearly horizontally
- In the vertical 3D variables are interpolated linearly in ln p
- To add circulation and account for pressure adjustment, the Δ geopotential at 500 hPa will be used
- The Δ-field is created from 33 CMIP models, where the 11 driest and 11 wettest models build specific ensembles

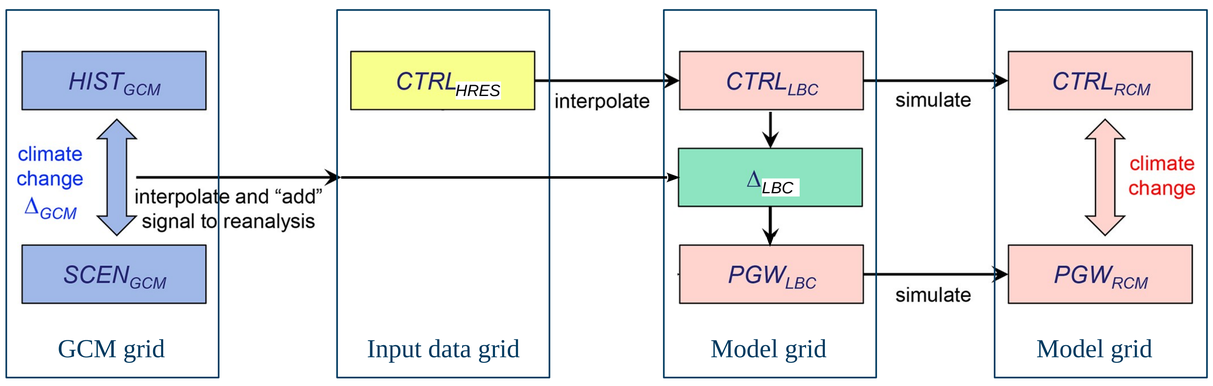

Figure 3. Overview of the workflow. (Source: Adapted from Fig. 2 from Brogli et al. (2023))

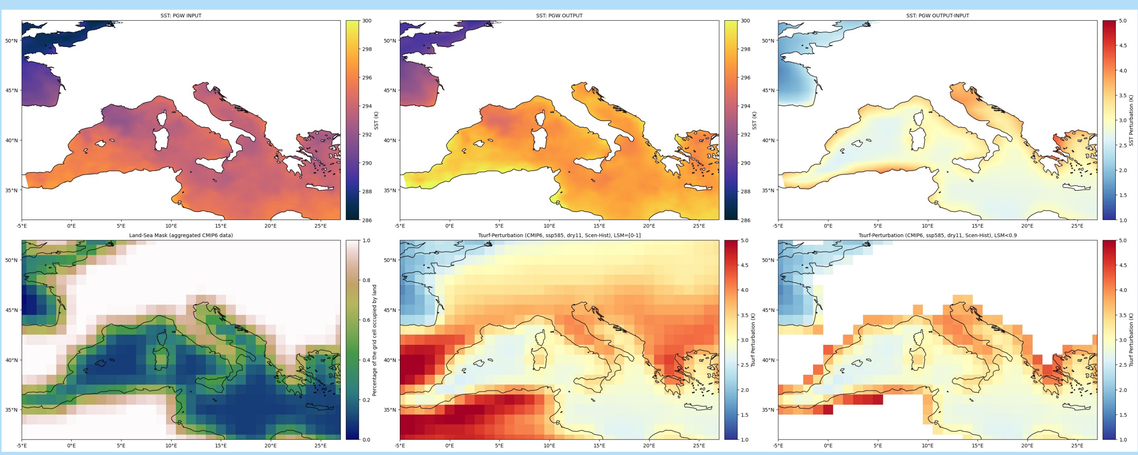

Figure 4. Upper: SST in the control and PGW run, and the difference between them. Lower: Land-sea mask of aggregated CMIP data, ΔTsfc (ΔSST) and ΔTsfc (ΔSST) for LSM<0.9.

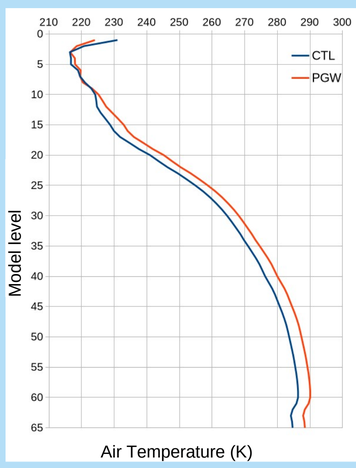

Figure 5. Vertical profile of T, for the control (blue) and PGW (red) run at a random location.

Results and open issues

2D fields
- The SST PGW-field shows land surface temperature along the coast (Fig. 4)
- Sea ice not implemented yet
- Tsoil not implemented yet

3D fields
- The added ΔT is visible in the vertical (Fig. 5)
- Method for pressure adjustment requires testing
- Implementing U,V requires testing.

Outlook

When the PGW approach in GL is sufficiently developed. We aim for the next steps:
- Implement PGW in Tactus
- Comparison within HCLIM community (Case study: heavy precipitation in Italy, May 2023)
- Provide boundaries of PGW-cases for LES modelling in UrbanAIR (Case study: o.a. heatwave in Paris)

This work is part of UrbanAIR, an EU-funded project under Horizon Europe

UrbanAIR

Funded by the European Union